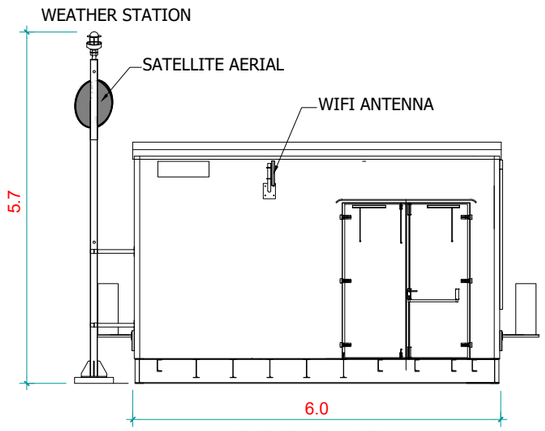

SIDE ELEVATION

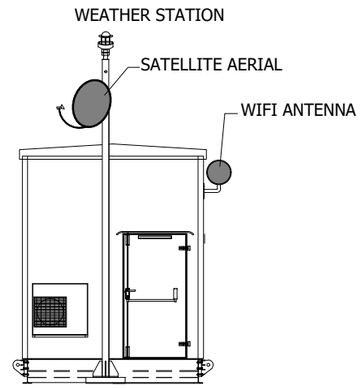

FRONT ELEVATION

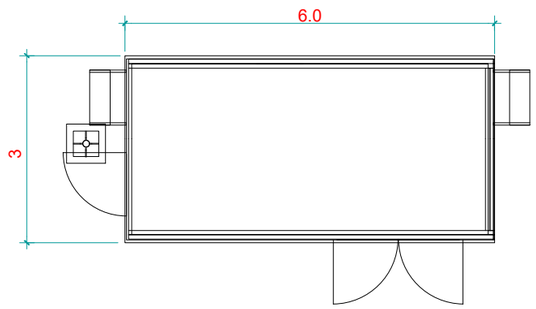

FLOOR PLAN

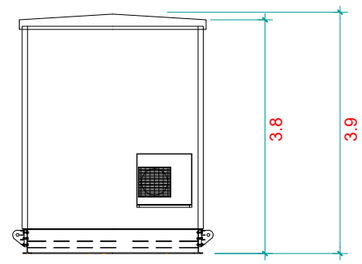

REAR ELEVATION

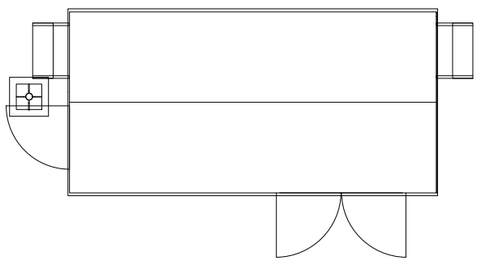

ROOF PLAN

0 2.5 5 Meters

GENERAL NOTES

1) ALL DIMENSIONS ARE IN METERS UNLESS SPECIFIED.

LEGEND

REFERENCE DRAWINGS

No.	DRAWING TITLE	DRAWING No.

R	DATE	DESCRIPTION OF REVISION	REMARKS

PROJECT NAME :

ALAW MÔN
SOLAR PV AND BATTERY

OWNER'S ENGINEER :

GENERAL CONTRACTOR :

THIS DRAWING IS PROPERTY OF CERO GENERATION AND MAY NOT BE COPIED (IN WHOLE OR IN PART) USED FOR MANUFACTURING OR DISCLOSED WITHOUT PRIOR CONSENT OF CERO GENERATION.

		SIGN	TITLE :
DRAWN BY	: GM		CONTROL ROOM ELEVATIONS
DATE	: 28-07-2021		
CHECKED BY	:		
DATE	:		
APPROVED BY	:		
DATE	:		
DRAWING No. :	AM9.0		

SHEET SIZE	SHEET	SCALE	REV
A3	1 OF 1	1:100	01